LUDVIK INDUSTRIEGERÄTE

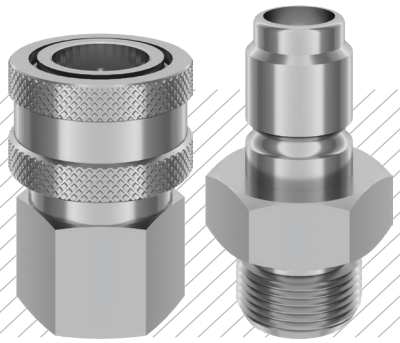

DN12

WATER COUPLINGS
WASSERKUPPLUNGEN

SERIE 121

Materials

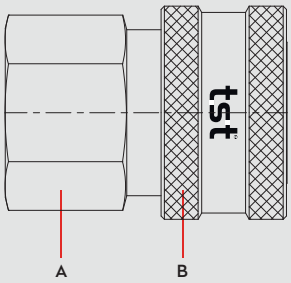

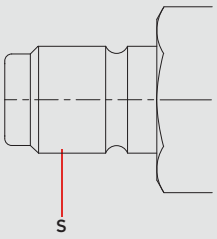

Material Code

A = Stainless Steel AISI**316**

B = Stainless Steel AISI**316**

S = Stainless Steel AISI**316**

Stainless Steel
0 - 100 bar

-26° to + 200°C (FPM)

Shut Off Type

OV 262 - 01785
OV 262 - 01510

FULL FLOW

DN 12 mm

PLASTIC SLEEVE

121 SP01



Options

EPDM

AISI303 Stainless Steel

Brass Ms 58

NICKEL

PLASTIC SLEEVE 121 SP01

Plug Profile Serie 121

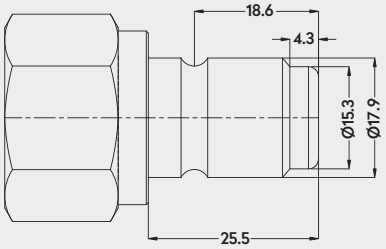

Compatible with

LUDVIK
INDUSTRIEGERÄTE

WATER COUPLINGS
WASSERKUPPLUNGEN

SERIE 121

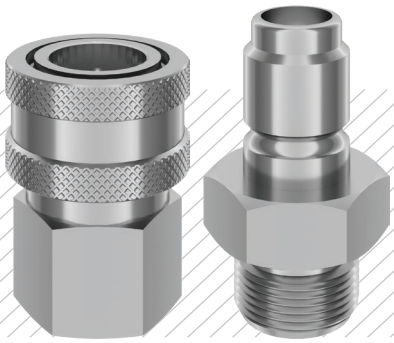

QUICK COUPLINGS SCHNELLKUPPLUNGEN

with male thread

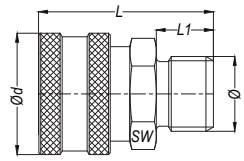

Part No.	Ø	SW	L	L1	Ød
121 EGF 17	BSP 3/8"	27	46	13	34
121 EGF 21	BSP 1/2"	27	49	16	34
121 EGF 26	BSP 3/4"	32	52	19	34

with female thread

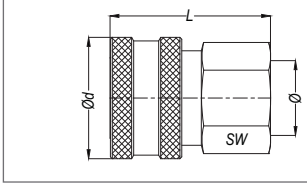

Part No.	Ø	SW	L	Ød
121 DGF 17	BSP 3/8"	27	45	34
121 DGF 21	BSP 1/2"	27	45	34

with standard hose tail

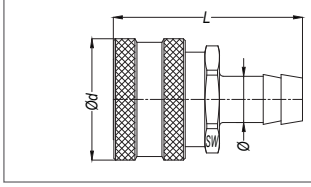

Part No.	Ø	L	Ød
121 HGF 13	Ø 13	53	34
121 HGF 16	Ø 16	62	34
121 HGF 19	Ø 19	62	34
121 HGF 25	Ø 25	62	34

PLUGS STECKNIPPEL

with male thread

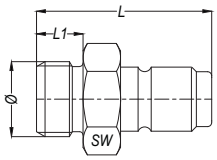

Part No.	Ø	SW	L	L1
121 EU 13	BSP 1/4"	22	45	9
121 EU 17	BSP 3/8"	22	46	10
121 EU 21	BSP 1/2"	27	49	13
121 EU 26	BSP 3/4"	32	53	17

with female thread

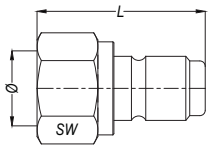

Part No.	Ø	SW	L
121 DU 13	BSP 1/4"	27	42
121 DU 17	BSP 3/8"	27	42
121 DU 21	BSP 1/2"	27	47
121 DU 26	BSP 3/4"	32	50

with standard hose tail

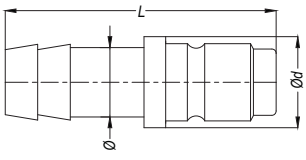

Part No.	Ø	L	Ød
121 HU 13	Ø 13	62,5	21
121 HU 16	Ø 16	62,5	21
121 HU 19	Ø 19	62,5	21