LUDVIK
INDUSTRIEGERÄTE

HYDRAULIC COUPLINGS
HYDRAULIK KUPPLUNGEN

DN 12-32
SERIE 169

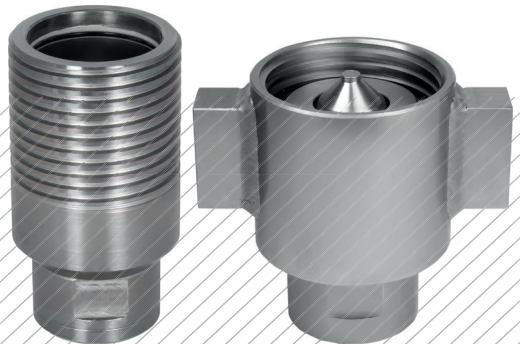

Materials

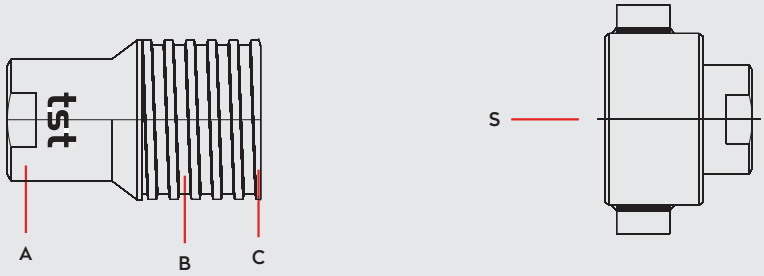

Material Code

A = Steel Zinc Plated

B = Steel

C = Steel

S = Steel Zinc Plated



OM 262 - 03690
OM 262 - 03215

-40° to + 105°C (NBR)

Shut Off Type

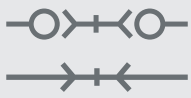

PRESSURE RATINGS

Size	Spillage (cc)	Air Inclusion (cc)	Max. Working Pressure	Max. Bursting Pressure
3/4"	8	12	345	1380
1"	16	25	345	1380
$1^{1/4}$"	31	48	345	1035
$1^{1/2}$"	64	98	345	1035
2"	141	205	345	1035
$2^{1/2}$"	204	368	210	415
3"	320	480	210	415
4"	400	610	30	70

DN 12 - 32 mm

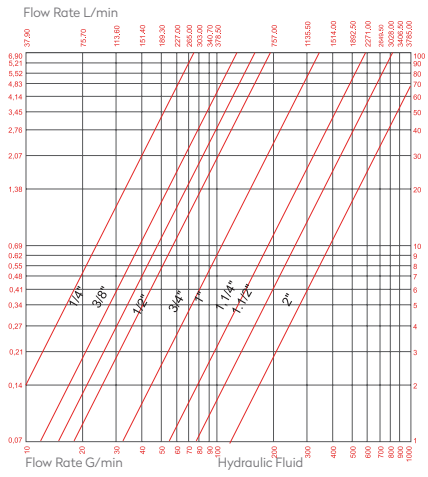

Options

EPDM

FPM

Applications

- Couplers are designed for high pressure and rugged heavy duty hydraulic applications.
- High flow and low pressure drop.
- Main using areas are oil fields and offshore.

Compatible with

SNAP - TITE 75 Series

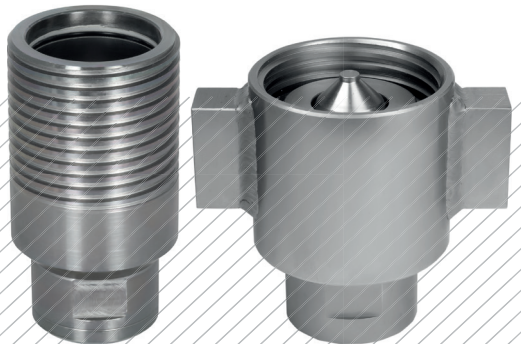

LUDVIK INDUSTRIEGERÄTE

HYDRAULIC COUPLINGS
HYDRAULIK KUPPLUNGEN

SERIE 169

QUICK COUPLINGS SCHNELLKUPPLUNGEN

with female thread

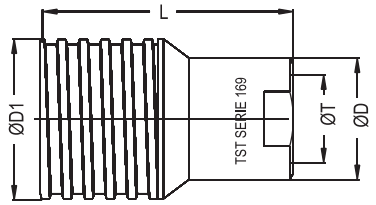

Body Size	ØT	/With Valve	ØT	/With Valve	ØD	ØD1	L	Acme Thread
12	BSP 3/4"	169.12 DGB 26	NPSF 3/4"	169.12 NPGB 26	35.5	44.5	83.2	1.3/4"-8
16	BSP 1"	169.16 DGB33	NPSF 1"	169.16 NPGB33	45.0	56.8	106	2.1/4"-6
20	BSP $1^{1/4"}$	169.20 DGB 42	NPSF $1^{1/4"}$	169.20 NPGB 42	54.4	66.3	136.3	2.5/8"-6
24	BSP $1^{1/2"}$	169.24 DGB 48	NPSF $1^{1/2"}$	169.24 NPGB 48	63.4	82.2	151.8	3.1/4"-4
32	BSP 2"	169.32 DGB 60	NPSF 2"	169.32 NPGB 60	82.5	101.5	179	4"-4
40	BSP $2^{1/2"}$	169.40 DGB 75	NPSF $2^{1/2"}$	169.40 NPGB 75	86	127	189.5	5"-4
48	BSP 3"	169.48 DGB 88	NPSF 3"	169.48 NPGB 88	108	152.4	210	6"-4
64	BSP 4"	169.64 DGB 113	NPSF 4"	169.64 NPGB 113	133.4	168.4	239	6.5/8"-4

PLUGS STECKNIPPEL

with female thread

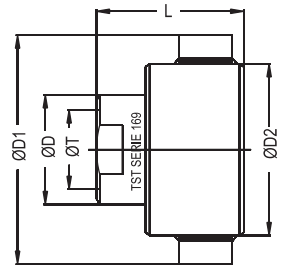

Body Size	ØT	/With Valve	ØT	/With Valve	ØD	ØD1	L	Acme Thread
12	BSP 3/4"	169.12 DUB 26	NPSF 3/4"	169.12 NUGB 26	35.2	106	72	1.3/4"-8
16	BSP 1"	169.16 DUB33	NPSF 1"	169.16 NUGB33	45	118	88	2.1/4"-6
20	BSP $1^{1/4"}$	169.20 DUB 42	NPSF $1^{1/4"}$	169.20 NUGB 42	54.4	144.5	112	2.5/8"-6
24	BSP $1^{1/2"}$	169.24 DUB 48	NPSF $1^{1/2"}$	169.24 NUGB 48	63.5	168	127.5	3.1/4"-4
32	BSP 2"	169.32 DUB 60	NPSF 2"	169.32 NUGB 60	82.5	203.2	154	4"-4
40	BSP $2^{1/2"}$	169.40 DUB 75	NPSF $2^{1/2"}$	169.40 NUGB 75	86	216	134.4	5"-4
48	BSP 3"	169.48 DUB 88	NPSF 3"	169.48 NUGB 88	108	279.4	148.5	6"-4
64	BSP 4"	169.64 DUB 113	NPSF 4"	169.64 NUGB 113	133.4	168.4	180.6	6.5/8"-4

Connected Length

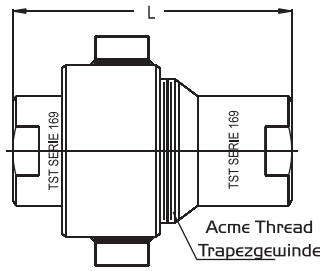

Size	ØT
12	123.6
16	153.5
20	197.3
24	221.3
32	255
40	257.3
48	268.8
64	314

Anti -Dust Cup for Sockets



Size	Part no.
12	169.12 KG 00
16	169.16 KG 00
20	169.20 KG 00
24	169.24 KG 00
32	169.32 KG 00
40	169.40 KG 00
48	169.48 KG 00
64	169.64 KG 00

Anti -Dust Cup for Plug



Size	Part no.
12	169.12 KU 00
16	169.16 KU 00
20	169.20 KU 00
24	169.24 KU 00
32	169.32 KU 00
40	169.40 KU 00
48	169.48 KU 00
64	169.64 KU 00